Cambridge International AS & A Level

Cambridge International Examinations
Cambridge International Advanced Subsidiary and Advanced Level

CANDIDATE NAME

CENTRE NUMBER | | | | | |

CANDIDATE NUMBER | | | | |

2358498204

PHYSICS **9702/42**

Paper 4 A Level Structured Questions **February/March 2018**

2 hours

Candidates answer on the Question Paper.

No Additional Materials are required.

READ THESE INSTRUCTIONS FIRST

Write your Centre number, candidate number and name on all the work you hand in.
Write in dark blue or black pen.
You may use an HB pencil for any diagrams or graphs.
Do not use staples, paper clips, glue or correction fluid.
DO **NOT** WRITE IN ANY BARCODES.

Answer **all** questions.

Electronic calculators may be used.
You may lose marks if you do not show your working or if you do not use appropriate units.

At the end of the examination, fasten all your work securely together.
The number of marks is given in brackets [ ] at the end of each question or part question.

This document consists of **26** printed pages and **2** blank pages.

© UCLES 2018

CAMBRIDGE International Examinations

Data

speed of light in free space	$c = 3.00 \times 10^{8}\,\text{m s}^{-1}$
permeability of free space	$\mu_0 = 4\pi \times 10^{-7}\,\text{H m}^{-1}$
permittivity of free space	$\varepsilon_0 = 8.85 \times 10^{-12}\,\text{F m}^{-1}$
	$(\frac{1}{4\pi\varepsilon_0} = 8.99 \times 10^{9}\,\text{m F}^{-1})$
elementary charge	$e = 1.60 \times 10^{-19}\,\text{C}$
the Planck constant	$h = 6.63 \times 10^{-34}\,\text{J s}$
unified atomic mass unit	$1\,\text{u} = 1.66 \times 10^{-27}\,\text{kg}$
rest mass of electron	$m_e = 9.11 \times 10^{-31}\,\text{kg}$
rest mass of proton	$m_p = 1.67 \times 10^{-27}\,\text{kg}$
molar gas constant	$R = 8.31\,\text{J K}^{-1}\,\text{mol}^{-1}$
the Avogadro constant	$N_A = 6.02 \times 10^{23}\,\text{mol}^{-1}$
the Boltzmann constant	$k = 1.38 \times 10^{-23}\,\text{J K}^{-1}$
gravitational constant	$G = 6.67 \times 10^{-11}\,\text{N m}^2\,\text{kg}^{-2}$
acceleration of free fall	$g = 9.81\,\text{m s}^{-2}$

© UCLES 2018

Formulae

uniformly accelerated motion	$s = ut + \frac{1}{2}at^2$ $v^2 = u^2 + 2as$
work done on/by a gas	$W = p\Delta V$
gravitational potential	$\phi = -\frac{Gm}{r}$
hydrostatic pressure	$p = \rho gh$
pressure of an ideal gas	$p = \frac{1}{3}\frac{Nm}{V}\langle c^2 \rangle$
simple harmonic motion	$a = -\omega^2 x$
velocity of particle in s.h.m.	$v = v_0 \cos \omega t$ $v = \pm \omega \sqrt{(x_0^2 - x^2)}$
Doppler effect	$f_o = \frac{f_s v}{v \pm v_s}$
electric potential	$V = \frac{Q}{4\pi\varepsilon_0 r}$
capacitors in series	$1/C = 1/C_1 + 1/C_2 + \ldots$
capacitors in parallel	$C = C_1 + C_2 + \ldots$
energy of charged capacitor	$W = \frac{1}{2}QV$
electric current	$I = Anvq$
resistors in series	$R = R_1 + R_2 + \ldots$
resistors in parallel	$1/R = 1/R_1 + 1/R_2 + \ldots$
Hall voltage	$V_H = \frac{BI}{ntq}$
alternating current/voltage	$x = x_0 \sin \omega t$
radioactive decay	$x = x_0 \exp(-\lambda t)$
decay constant	$\lambda = \frac{0.693}{t_{\frac{1}{2}}}$

© UCLES 2018

[Turn over

Answer **all** the questions in the spaces provided.

1 (a) (i) State what is meant by a line of force in a gravitational field.

.....

.....

.....[1]

(ii) By reference to the pattern of the lines of gravitational force near to the surface of the Earth, explain why the acceleration of free fall near to the Earth's surface is approximately constant.

.....

.....

.....

.....

.....[3]

(b) The Moon may be considered to be a uniform sphere that is isolated in space. It has radius 1.74×10^3 km and mass 7.35×10^{22} kg.

(i) Calculate the gravitational field strength at the Moon's surface.

gravitational field strength = ... N kg^{-1} [2]

(ii) A satellite is in a circular orbit about the Moon at a height of 320 km above its surface.

Calculate the time for the satellite to complete one orbit of the Moon.

time = ... s [3]

[Total: 9]

© UCLES 2018

2 A cylinder contains 5.12 mol of an ideal gas at pressure of 5.60×10^5 Pa and volume 3.80×10^4 cm^3.

(a) Determine the temperature of the gas.

temperature = ... K [2]

(b) The average kinetic energy E_K of a molecule of the gas is given by the expression

$$E_K = \frac{3}{2} kT$$

where k is the Boltzmann constant and T is the thermodynamic temperature.

The gas is heated at constant pressure so that its temperature rises by 125 K.

(i) Use your answer in **(a)** to determine the new volume of the gas.

volume = ... cm^3 [2]

(ii) Calculate the increase in internal energy of the gas. Explain your working.

increase in internal energy = ... J [3]

© UCLES 2018

(c) **(i)** Use your answer in **(b)(i)** to determine the external work done during the expansion of the gas.

work done = ...J [2]

(ii) Calculate the total thermal energy required to heat the gas in **(b)**.

energy = ...J [1]

[Total: 10]

© UCLES 2018

3 **(a)** A mass is undergoing simple harmonic motion with amplitude x_0. The maximum velocity of the mass has magnitude v_0.

On Fig. 3.1, show the variation with displacement x of the velocity v of the mass.

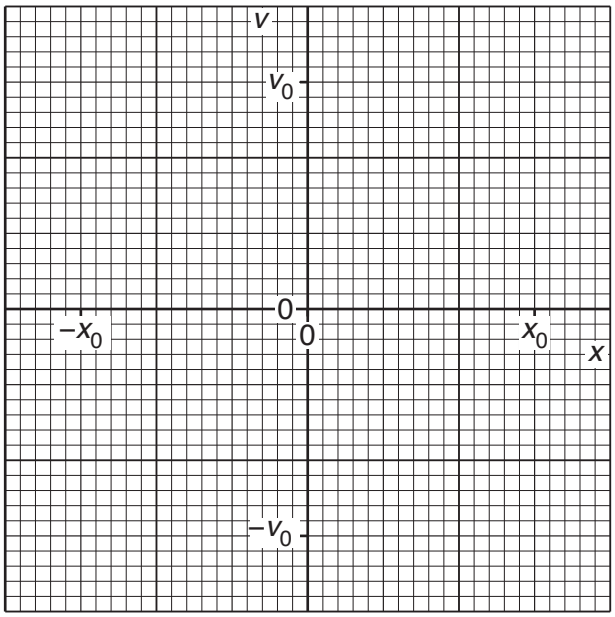

Fig. 3.1

[2]

(b) A straight stiff wire carries a constant current in a region of uniform magnetic flux density.

The angle θ between the direction of the current and the direction of the magnetic field is varied. The maximum force on the wire is F_0.

On Fig. 3.2, show the variation with angle θ of the force F on the wire for values of θ between 0° and 90°.

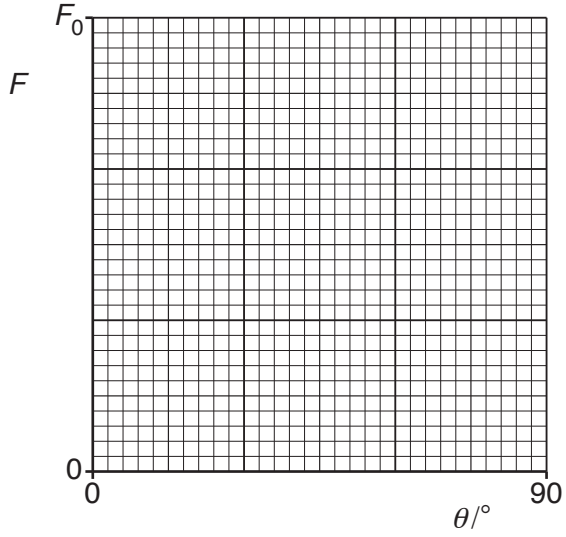

Fig. 3.2

[2]

(c) A sinusoidal supply has frequency 250 Hz and r.m.s. potential difference 2.8 V.

On the axes of Fig. 3.3, show quantitatively the variation with time t of the voltage V for one cycle of the varying voltage.

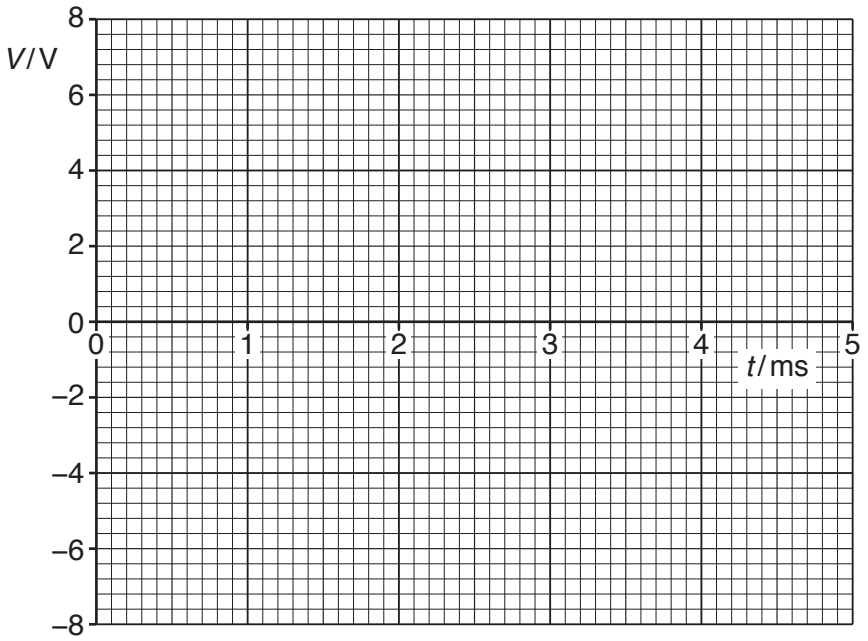

Fig. 3.3

[2]

(d) One particular fission reaction may be represented by the equation

$$^{235}_{92}\text{U} + ^{1}_{0}\text{n} \rightarrow ^{141}_{56}\text{Ba} + ^{92}_{36}\text{Kr} + 3^{1}_{0}\text{n}$$

The variation with nucleon number A of the binding energy per nucleon B_E is shown in Fig. 3.4.

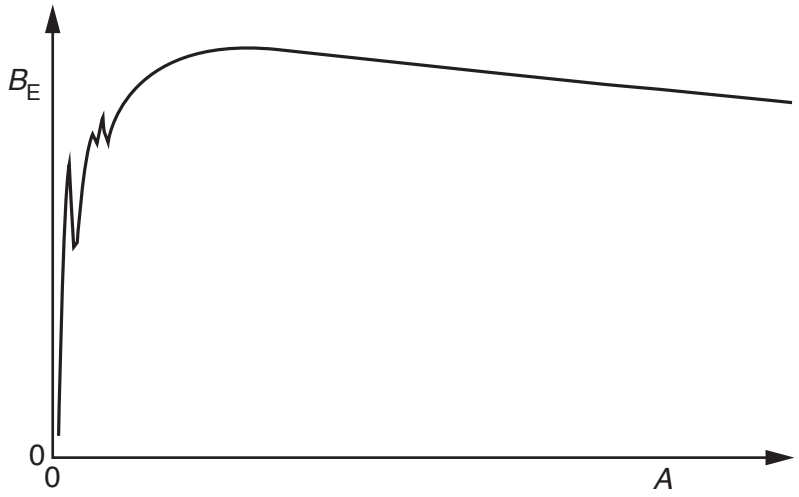

Fig. 3.4

On Fig. 3.4, mark on the line the position of

(i) the nucleus $^{235}_{92}\text{U}$ (label this point U),

(ii) the nucleus $^{141}_{56}\text{Ba}$ (label this point Ba),

(iii) the nucleus $^{92}_{36}\text{Kr}$ (label this point Kr).

[2]

[Total: 8]

4 **(a)** Explain what is meant by the *natural frequency of vibration* of a system.

.....

.....

.....[1]

(b) A block of metal is fixed to one end of a vertical spring. The other end of the spring is attached to an oscillator, as shown in Fig. 4.1.

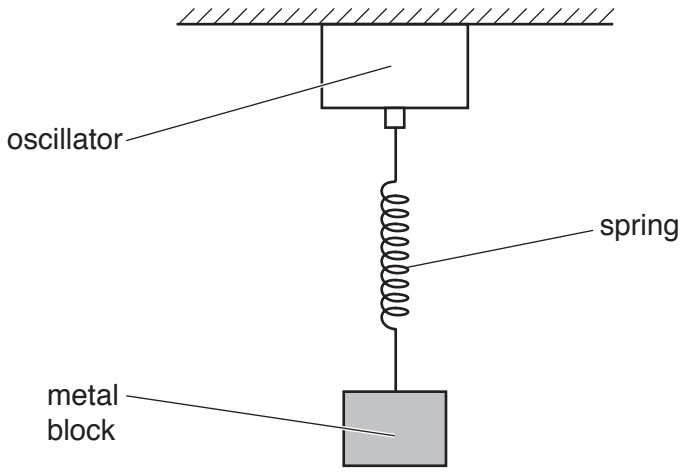

Fig. 4.1

The amplitude of oscillation of the oscillator is constant.

The variation of the amplitude x_0 of the oscillations of the block with frequency f of the oscillations is shown in Fig. 4.2.

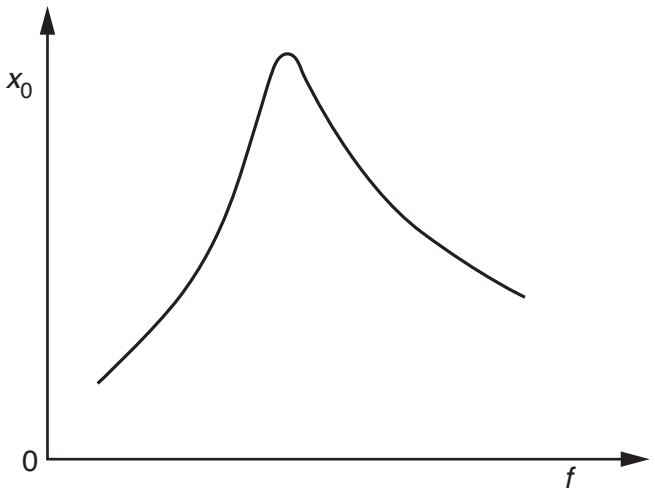

Fig. 4.2

(i) Name the effect shown in Fig. 4.2.

.....[1]

(ii) State and explain whether the block is undergoing damped oscillations.

.....

.....

.....[2]

(c) State **one** example in which the effect shown in Fig. 4.2 is useful.

.....

.....[1]

[Total: 5]

BLANK PAGE

© UCLES 2018

5 **(a)** Explain the main principles behind the **use** of ultrasound to obtain diagnostic information about internal body structures.

.....

.....

.....

.....

.....

.....

.....

.....

.....

.....

.....

.....[6]

(b) **(i)** Define *specific acoustic impedance*.

.....

.....

.....[2]

(ii) Two media have specific acoustic impedances of Z_1 and Z_2.

The magnitudes of the acoustic impedances may be almost equal or very different.
State how these differences affect the intensity reflection coefficient at the boundary between the two media.

$Z_1 \approx Z_2$ .....

.....

$Z_1 \gg Z_2$ or $Z_1 \ll Z_2$ .....

.....
[2]

[Total: 10]

6 The digital transmission of speech may be represented using the block diagram of Fig. 6.1.

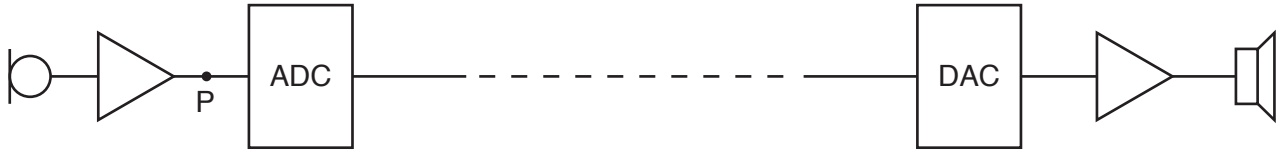

Fig. 6.1

(a) Part of the signal at point P on Fig. 6.1 is shown in Fig. 6.2.

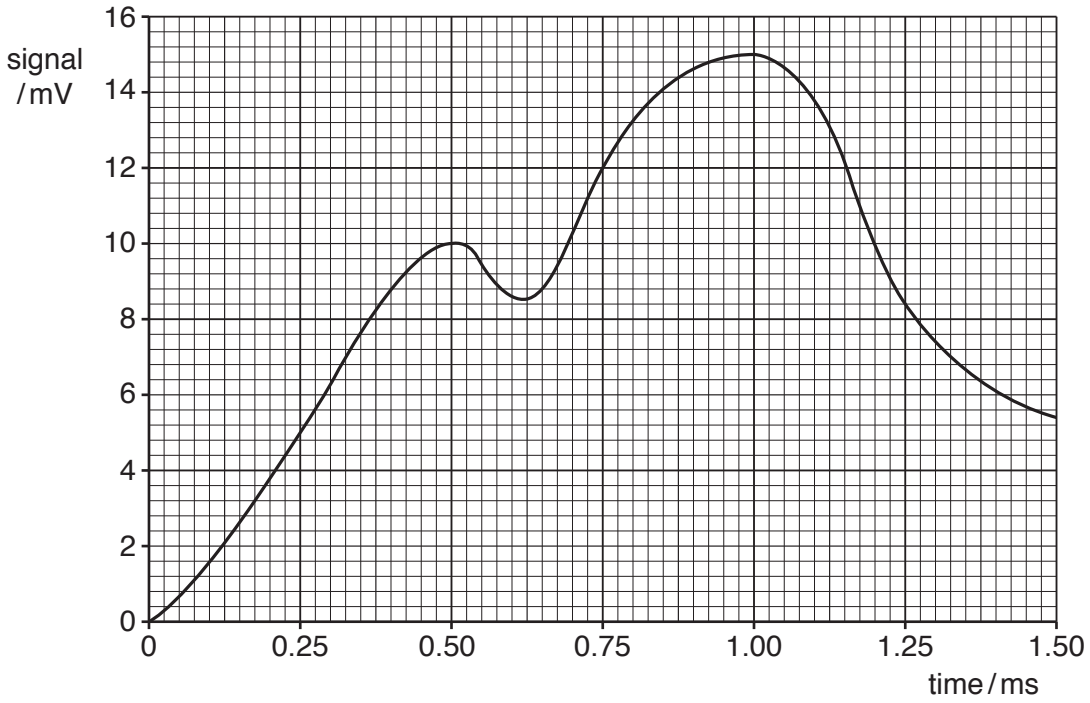

Fig. 6.2

The analogue-to-digital converter (ADC) samples the signal at time intervals of 0.25 ms. Each sample is converted into a four-bit number with the smallest bit representing 1.0 mV.

Use Fig. 6.2 to determine the four-bit number produced by the ADC at time

(i) 0.25 ms,

number .....

(ii) 1.25 ms.

number .....
[2]

© UCLES 2018

(b) The digital number is transmitted and then converted to an analogue form by the digital-to-analogue converter (DAC).

Use data from Fig. 6.2 to draw, on the axes of Fig. 6.3, the output level of the DAC for time $t = 0$ to time $t = 1.50$ ms.
Assume that there is no time delay of the transmission of the signal between point P and the output of the DAC.

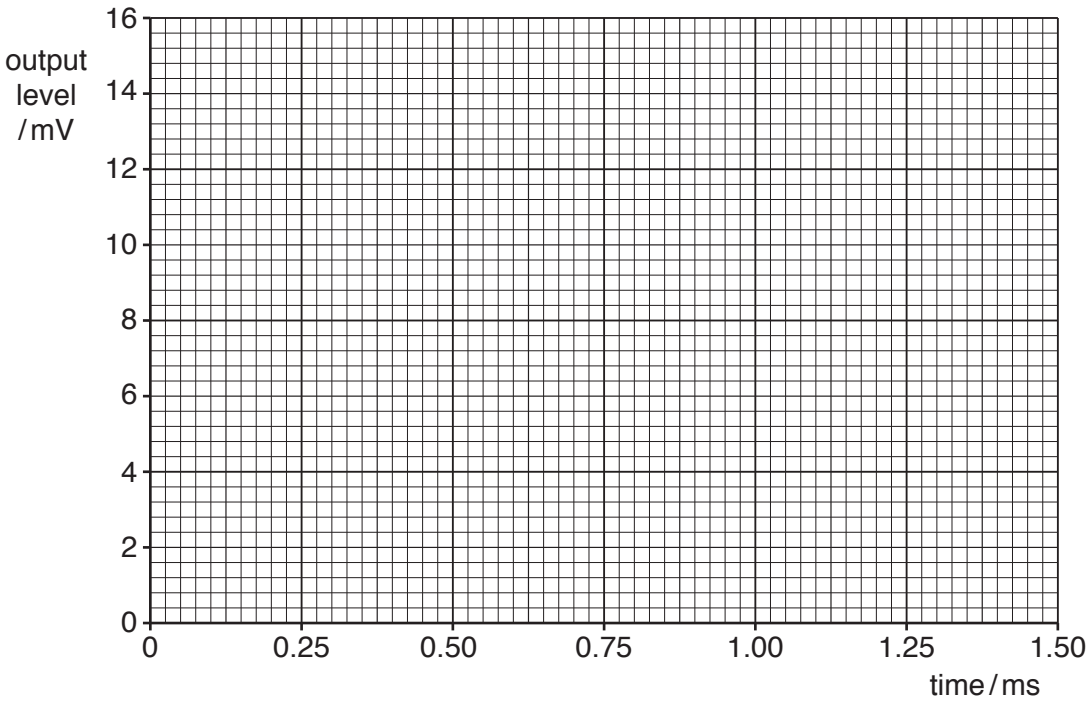

Fig. 6.3

[4]

[Total: 6]

7 **(a)** State what is meant by *electric potential* at a point.

.....

.....

.....[2]

(b) The centres of two charged metal spheres A and B are separated by a distance of 44.0 cm, as shown in Fig. 7.1.

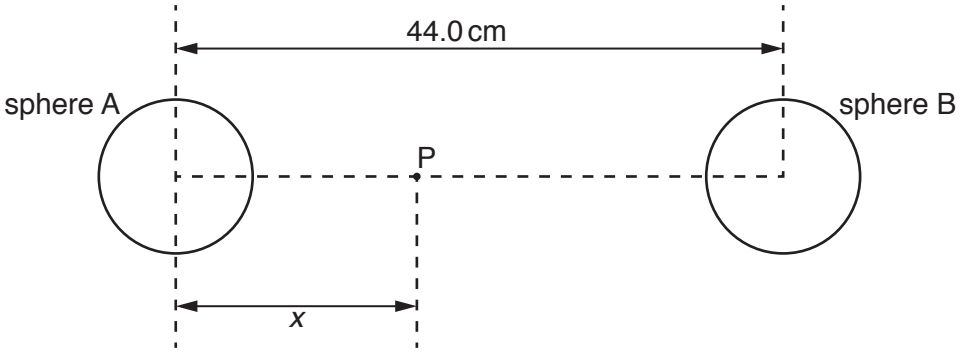

Fig. 7.1 (not to scale)

A moveable point P lies on the line joining the centres of the two spheres. Point P is a distance x from the centre of sphere A. The variation with distance x of the electric potential V at point P is shown in Fig. 7.2.

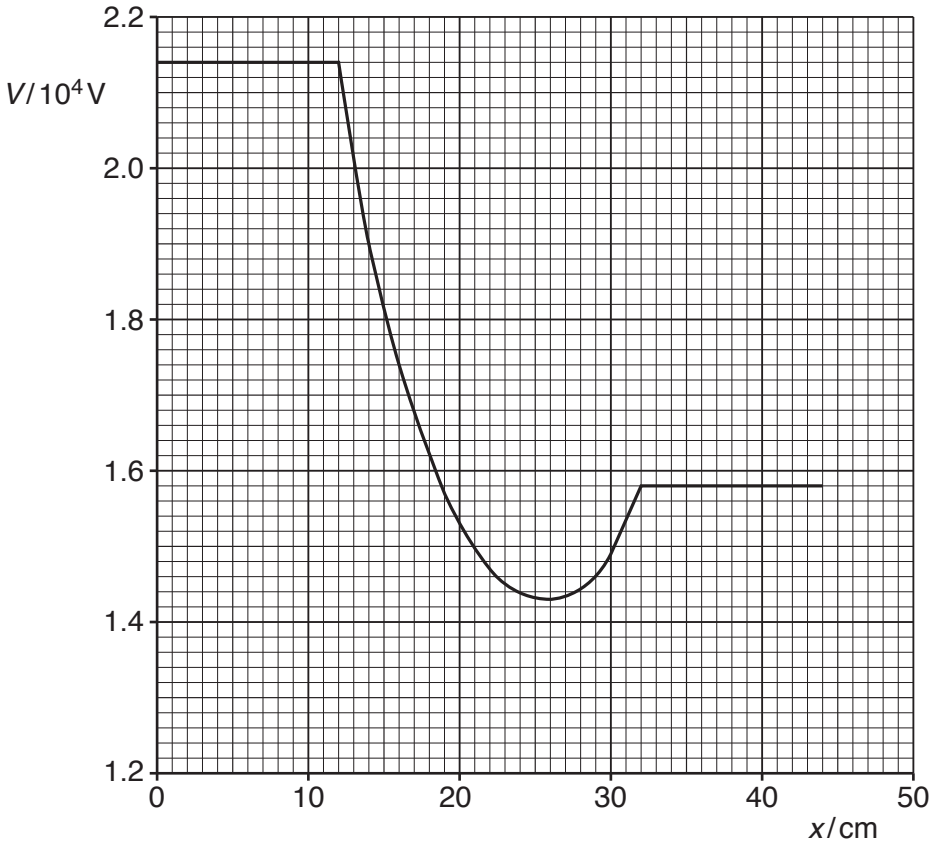

Fig. 7.2

© UCLES 2018

(i) Use Fig. 7.2 to state and explain whether the two spheres have charges of the same, or opposite, sign.

.....

.....

.....[1]

(ii) A positively-charged particle is at rest on the surface of sphere A.

The particle moves freely from the surface of sphere A to the surface of sphere B.

1. Describe qualitatively the variation, if any, with distance x of the speed of the particle as it

moves from $x = 12\,\text{cm}$ to $x = 25\,\text{cm}$ .....

.....

passes through $x = 26\,\text{cm}$ .....

.....

moves from $x = 27\,\text{cm}$ to $x = 31\,\text{cm}$ .....

.....

reaches $x = 32\,\text{cm}$ .....

.....[4]

2. The particle has charge $3.2 \times 10^{-19}\,\text{C}$ and mass $6.6 \times 10^{-27}\,\text{kg}$.

Calculate the maximum speed of the particle.

speed = ... m s^{-1} [2]

[Total: 9]

© UCLES 2018

[Turn over

8 **(a)** Two properties of an ideal operational amplifier (op-amp) are infinite bandwidth and infinite slew rate.

Explain what is meant by

(i) infinite bandwidth,

.....

.....[1]

(ii) infinite slew rate.

.....

.....[1]

(b) An ideal op-amp is incorporated into the circuit of Fig. 8.1.

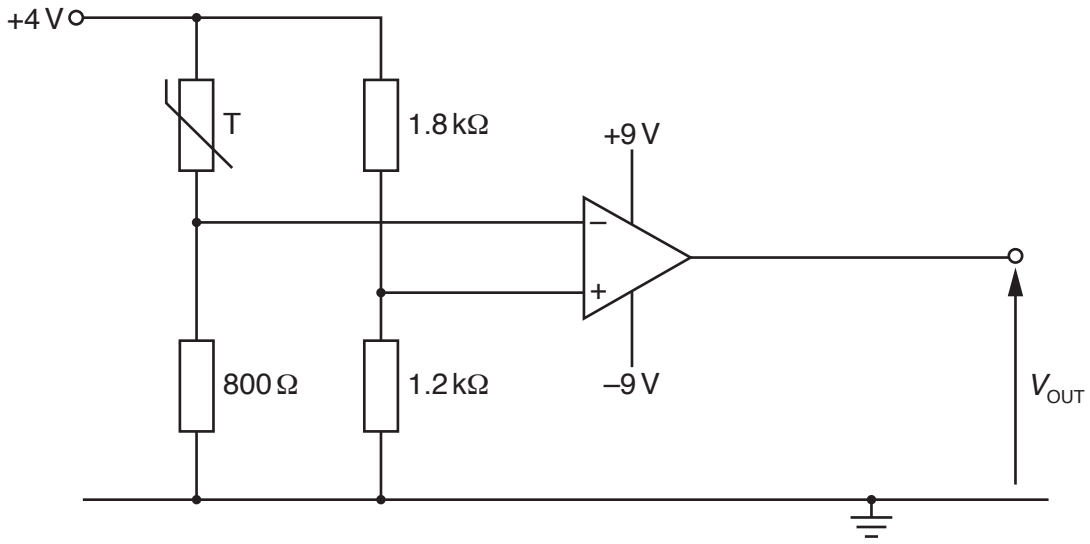

Fig. 8.1

(i) Determine the resistance R_T of the thermistor T at which the output potential difference V_{OUT} is zero.

R_T = ...Ω [1]

(ii) The temperature of the thermistor is gradually increased so that its resistance decreases from $1.5R_T$ to $0.5R_T$.

On Fig. 8.2, draw a line to show the variation of the output potential difference V_{OUT} with the thermistor resistance.

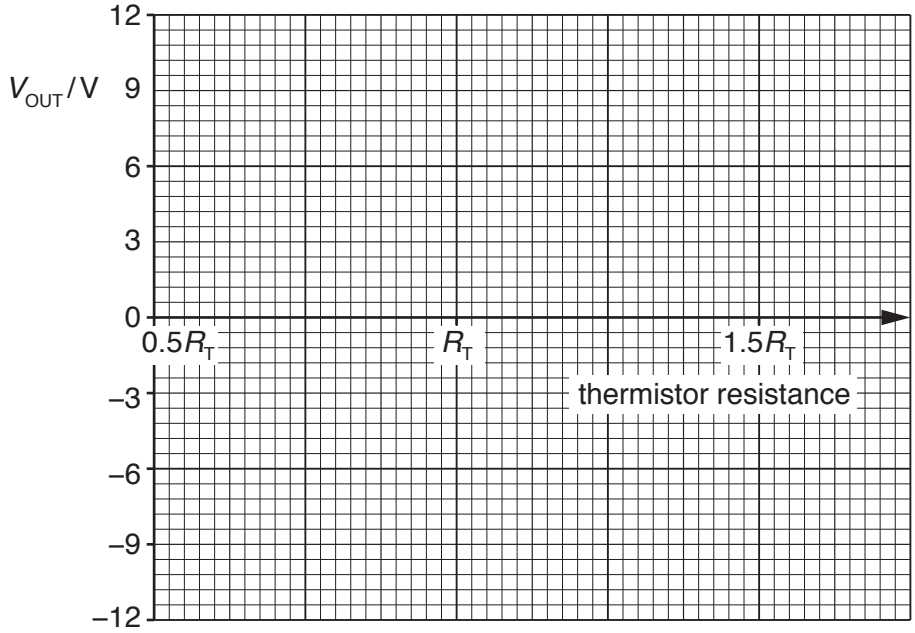

Fig. 8.2

[2]

(iii) On Fig. 8.1, draw the symbol for a light-emitting diode (LED), connected at the output of the circuit, such that it emits light when the resistance of the thermistor is less than R_T.

[2]

[Total: 7]

9 A thin slice of conducting material has its faces PQRS and VWXY normal to a uniform magnetic field of flux density *B*, as shown in Fig. 9.1.

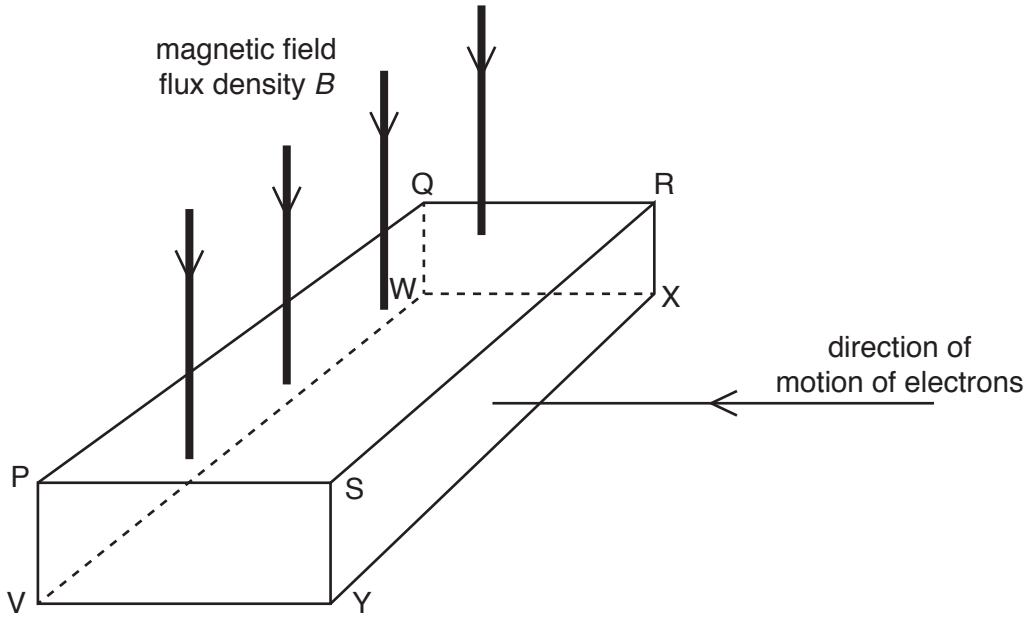

Fig. 9.1

Electrons enter the slice at right-angles to face SRXY.

A potential difference, the Hall voltage V_H, is developed between two faces of the slice.

(a) (i) Use letters from Fig. 9.1 to name the two faces between which the Hall voltage is developed.

..... and .....[1]

(ii) State and explain which of the two faces named in **(a)(i)** is the more positive.

.....

.....[2]

© UCLES 2018

(b) The Hall voltage V_H is given by the expression

$$V_H = \frac{BI}{ntq}.$$

(i) Use the letters in Fig. 9.1 to identify the distance t.

.....[1]

(ii) State the meaning of the symbol n.

.....

.....[1]

(iii) State and explain the effect, if any, on the polarity of the Hall voltage when negative charge carriers (electrons) are replaced with positive charge carriers, moving in the same direction towards the slice.

.....

.....

.....[2]

[Total: 7]

© UCLES 2018

[Turn over

10 (a) (i) Define *magnetic flux*.

.....

.....

.....[2]

(ii) State Faraday's law of electromagnetic induction.

.....

.....

.....

.....[2]

(b) A solenoid has a coil C of wire wound tightly about its centre, as shown in Fig. 10.1.

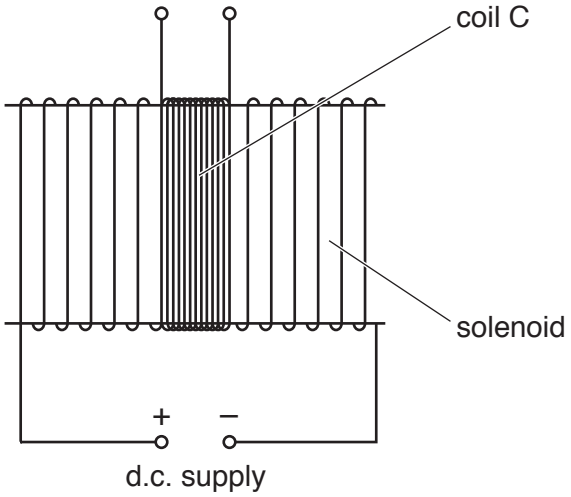

Fig. 10.1

The coil C has 96 turns.

The uniform magnetic flux Φ (in weber) in the solenoid is given by the expression

$$\Phi = 6.8 \times 10^{-6} \times I$$

where I is the current (in amperes) in the solenoid.

© UCLES 2018

Calculate the average electromotive force (e.m.f.) induced in coil C when a current of 3.5 A is reversed in the solenoid in a time of 2.4 ms.

e.m.f. = ... V [2]

(c) The d.c. supply in Fig. 10.1 is now replaced with a sinusoidal alternating supply.

Describe qualitatively the e.m.f. that is now induced in coil C.

.....

.....

.....[2]

[Total: 8]

© UCLES 2018

[Turn over

11 Some electron energy bands in a solid are shown in Fig. 11.1.

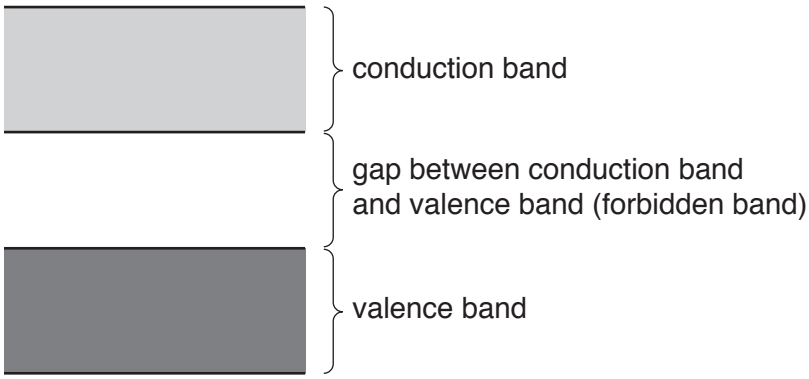

Fig. 11.1

The width of the forbidden band and the number density of charge carriers occupying each band depends on the nature of the solid.

Use band theory to explain why

(a) the resistance of a metal at room temperature increases gradually with temperature,

.....

.....

.....

.....

.....[3]

(b) the resistance, at constant temperature, of a light-dependent resistor (LDR) decreases with increasing light intensity.

.....

.....

.....

.....

.....

.....[4]

[Total: 7]

© UCLES 2018

12 **(a)** Suggest **two** causes of lack of sharpness of an X-ray image.

1. .....

.....

2. .....

.....[2]

(b) The thickness of a sheet of metal is examined using a parallel X-ray beam, as illustrated in Fig. 12.1.

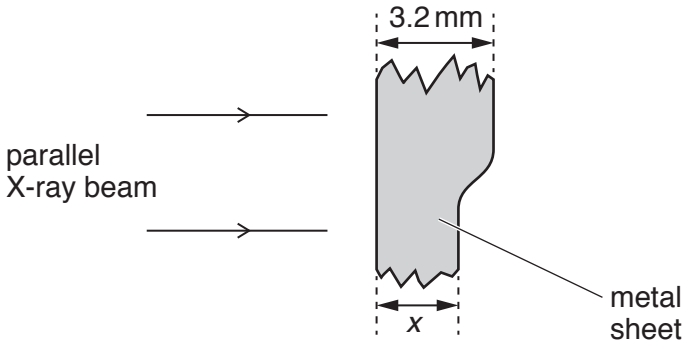

Fig. 12.1 (not to scale)

Part of the beam passes normally through the metal of thickness 3.2 mm. Another part of the beam passes normally through the metal of thickness x mm.

The linear attenuation (absorption) coefficient for the X-ray beam in the metal is 1.5 cm^{-1}.

The ratio

$$\frac{\text{intensity of X-ray beam transmitted through 3.2 mm of metal}}{\text{intensity of X-ray beam transmitted through } x \text{ mm of metal}}$$

is found to be 0.81.

(i) Calculate the thickness x.

x = ... mm [2]

(ii) The ratio of the intensities is also the ratio of the powers of the X-ray beams. Calculate this ratio in decibels.

ratio = ... dB [2]

[Total: 6]

13 (a) (i) Define radioactive *decay constant*.

.....

.....

.....[2]

(ii) Show that the decay constant λ is related to the half-life $t_{\frac{1}{2}}$ of a radioactive isotope by the expression

$$\lambda t_{\frac{1}{2}} = \ln 2$$

[2]

(b) A small volume of solution containing the radioactive isotope sodium-24 ($^{24}_{11}Na$) has an initial activity of 3.8×10^4 Bq. Sodium-24, of half-life 15 hours, decays to form a stable daughter isotope.

All of the solution is poured into a container of water. After 36 hours, a sample of water of volume 5.0 cm^3, taken from the container, is found to have an activity of 1.2 Bq.

Assuming that the solution of the radioactive isotope is distributed uniformly throughout the container of water, calculate the volume of water in the container.

volume = ... cm^3 [4]

[Total: 8]

© UCLES 2018

BLANK PAGE

Permission to reproduce items where third-party owned material protected by copyright is included has been sought and cleared where possible. Every reasonable effort has been made by the publisher (UCLES) to trace copyright holders, but if any items requiring clearance have unwittingly been included, the publisher will be pleased to make amends at the earliest possible opportunity.

To avoid the issue of disclosure of answer-related information to candidates, all copyright acknowledgements are reproduced online in the Cambridge International Examinations Copyright Acknowledgements Booklet. This is produced for each series of examinations and is freely available to download at www.cie.org.uk after the live examination series.

Cambridge International Examinations is part of the Cambridge Assessment Group. Cambridge Assessment is the brand name of University of Cambridge Local Examinations Syndicate (UCLES), which is itself a department of the University of Cambridge.

© UCLES 2018